Vissersdijk 4, 4301 ND
Zierikzee, the Netherlands
www.DeltaPowerSupplies.com
Tel. +31 111 413656

SM15K - Interfaces

- **INT MOD M/S-2**
- **INT MOD CON**
- **INT MOD SER**
- **INT MOD DIG**
- **INT MOD ANA**

Firmware Update
It is strongly recommended, first to perform a firmware update before further operation. Download the SM15K Quick Start Manual for instructions.

Driver & Example Software
For several applications and Interfaces there is Driver & Example Software available on our website. See **PRODUCTS\SM15K\DOWNLOADS**.

PRODUCT MANUAL
Firmware version P0151

Contents:
1 – **Safety Instructions**
2 – **Sicherheitshinweise**
3 – **Consignes de Sécurité**
4 – **Master Slave Interface**
5 – **Isolated Contacts**
6 – **Serial Interface**
7 – **Digital (User) I/O**
8 – **Isolated Analog Interface**

1 SAFETY INSTRUCTIONS - SM15K-series

1.1 Caution

The following safety precautions must be observed during all phases of operation, service and repair of this equipment. Failure to comply with the safety precautions or warnings in this document violates safety standards of design, manufacture and intended use of this equipment and may impair the built-in protections. Delta Elektronika shall not be liable for user's failure to comply with these requirements.

1.2 Installation Category

The Delta Elektronika power supplies have been evaluated to installation category II (Over voltage category II).

1.3 Grounding of Mains Terminals (AC Power Terminals)

This product is a safety Class 1 unit. To minimize shock hazard, the unit must be connected to the AC Power Supply mains through a four conductor power cable, with the ground wire firmly connected to an electrical ground (safety ground) at the power outlet.

For units designed to be hard-wired to the mains supply, the protective earth terminal must be connected to the safety electrical ground before another connection is made. Any interruption of the protective ground conductor, or disconnection of the protective earth terminal will cause a potential shock hazard that might cause personal injury.

1.4 Grounding of DC Power Terminals

If the DC power terminal of a unit is specified to sink or source to a maximum of 60VDC, and either the 'minus' or 'plus' DC power terminal is grounded, the voltage on the DC power terminals and sense connections can be considered safe.

Warning! When the 'plus' DC power terminal can exceed 60VDC in respect to the 'minus' DC power terminal, additional external measures must be taken to ensure safety isolation of the DC power terminals and sense connections.

Warning! When the 'minus' DC power terminal of the unit can exceed 60VDC / 42.4Vpk in respect to ground, additional external measures must be taken to ensure safety isolation of the DC power terminals and sense connections.

The standard LAN, USB and Interlock connectors and optional interfaces are at ground level and can be considered safe if the 'minus' DC power terminal of the unit does not exceed 1000VDC / 707Vpk in respect to ground for SM70-CP-90, SM210-CP-150 and SM500-CP-90, or does not exceed 1500VDC / 1060Vpk in respect to ground for SM1500-CP-30.

Caution 1: If a low voltage unit has both DC power terminals floating, or if the terminals are in series with an external high AC or DC voltage, the 'minus' DC power terminal can exceed the safe value in respect to ground as specified in the above warning!

Caution 2: Although a high voltage unit is set to a safe voltage below 60VDC, for safety it must always be considered as a high voltage unit! Wrong operation, a programming error or an external defect can result in an unsafe high DC output voltage.

For more information regards Grounding & Safety, see the online application note *"Safe operation of a power supply"*.

1.5 Danger of electrical shock

Touching the contacts of the mains plug or wires directly after disconnecting from the mains, can cause an electrical shock. And there can still be a dangerous voltage between one of the DC power terminals and the PE because of charged X-capacitors. This can also happen when the DC power output is switched off, but the unit is still switched on! Therefore never touch PE and one of the DC power terminals at the same time.

1.6 Connection to mains supply

Either connect to the mains supply permanently or via an industrial type plug, complying with IEC 60309.
"Permanently connected equipment" or "Pluggable equipment type B".

1.7 Fuses

Fuses to be changed by authorized Delta Elektronika service personnel only, for continued protection against risk of fire.

1.8 AC Input Ratings

Do not use an AC Supply which exceeds the AC input voltage and frequency rating of this unit. The AC input voltage and frequency rating of the Delta Elektronika power supply series are stated in the accompanying datasheet.

1.9 Live Circuits

Operating personnel should not remove the unit covers. No internal adjustment or component replacement is allowed by non Delta Elektronika qualified personnel. Never replace components with the power cable connected. To avoid injuries, always disconnect power, remove external voltage sources and discharge circuits before touching components.

1.10 Parts Substitutions & Modifications

Parts substitutions and modifications are allowed by authorized Delta Elektronika service personnel only. For repairs or modifications the unit must be returned to a Delta Elektronika service facility.

1.11 Removal of (safety) covers

Safety cover(s) are used to cover potentially hazardous voltages.

Observe the following when removing safety cover(s):

- Switch off the unit and disconnect the unit from the AC mains supply and from the DC power application.
- Wait for 5 minutes to allow internal capacitors to discharge, then unscrew and remove the cover(s).
- Always place the cover(s) back before connecting the unit to the mains supply again.

1.12 Handling and mounting

Warning! Unit weight is 27kg! Take care when unpacking or moving unit: lift with 2 persons or use a lift tool.

- Risk of crushing or clamping of limbs!
- Risk of cutting: unit has sharp edges and corners!

Warning! No wall mounting or ceiling mounting allowed! Risk of crushing under unit.
Only mount unit horizontally, place on a stable surface or use rack mounting.

1.13 Rotating fan, thermal burn

Proper air flow is required for cooling of the unit. This enables operation at full power and a longer life time.
If the unit gets over heated, the power will shut down until unit has cooled down again.

Warning! Top cover and fan exhausts can get hot. Avoid touching these while operating the unit at high power!
Warning! Do not block fan openings, or air exhausts. Do not try to enter fan openings by any object to obstruct fan. Long hair can get stuck in fan, wear a hairnet if you have long hair.

Warning! Do not (dis)connect cables to the DC power terminals while the unit is on. Sudden making or breaking of high DC currents can cause large sparks, even at low voltages. Risk of thermal burn and fire!

1.14 Electro medical devices

Warning! High currents can run through the DC power terminals. These currents cause strong magnetic fields. Do not come near if you have an electro medical device such as a pacemaker.

1.15 Environmental Conditions

- The Delta Elektronika power supplies safety approval applies to the following operating conditions:
- Usage : Indoor use only.
  Warning! Not intended to be used in the presence of children or animals!
- Ambient temperature : -20 to 50 °C.
- Maximum relative humidity : 95%, noncondensing, up to 40 °C, 75%, non condensing, up to 50 °C.
- Altitude : Do not use above 2000 m sea level.
  Warning! Electrical Creepage & Clearance not valid for higher altitudes!
- Pollution degree : 2

1.16 Symbols & markings

Caution risk of electrical Shock.

Instruction manual symbol. The instrument will be marked with this symbol when it is necessary fort he user to refer to the instruction manual.

Protective ground conductor terminal.

O *Off (supply).*

I *On (supply).*

WEEE (Waste Electrical & Electronic Equipment)

1.17 Correct Disposal of this Product

Applicable in the European Union.

This marking shown on the product, its packing or its literature indicates that it should not be disposed with other wastes at the end of its working life, but should be collected separately to recycle it responsibly to promote the sustainable reuse of material resources.

2 SICHERHEITSHINWEISE - SM15K-series

2.1 Vorsicht

Die folgenden Sicherheitsvorkehrungen müssen in allen Betriebs-, Service- und Reparaturphasen dieses Geräts befolgt werden. Die Nichteinhaltung der Sicherheitsvorkehrungen oder Warnungen in diesem Dokument verstößt gegen die Sicherheitsstandards im Hinblick auf Bauart, Produktion und vorgesehene Nutzung dieses Geräts und kann die eingebauten Schutzvorrichtungen beschädigen. Delta Elektronika haftet nicht dafür, wenn der Nutzer diesen Anforderungen nicht nachkommt.

2.2 Installationskategorie

Die Stromversorgungen von Delta Elektronika wurden der Installationskategorie II (Überspannungskategorie II) zugeordnet.

2.3 Erdung der Netzanschlussklemmen (AC-Einspeiseklemmen)

Dieses Produkt ist ein Gerät der Sicherheitsklasse 1. Um die Gefahr eines elektrischen Schlags zu minimieren, muss das Gerät mit einem Vierleiter-Stromkabel mit dem AC-Stromversorgungsnetz verbunden werden. Hierbei muss der Schutzleiter fest mit einem elektrischen Erdungsanschluss (Schutzleiter) an der Stromquelle verbunden sein. Bei Geräten, die fest mit dem Versorgungsnetz verdrahtet werden, muss die Schutzerdungsklemme mit dem Sicherheitserdungsanschluss verbunden werden, bevor eine andere Verbindung hergestellt wird. Eine Unterbrechung des Schutzleiters oder eine Trennung der Schutzerdungsklemme kann zu einem elektrischen Schlag führen, der zur Verletzung von Personen führen kann.

2.4 Erdung der DC-Anschlussklemmen

Wenn die DC-Anschlussklemme eines Geräts dafür ausgelegt ist, maximal 60 VDC zu empfangen oder zu beziehen und entweder die 'minus' oder 'plus' DC-Anschlussklemme geerdet ist, kann die Spannung auf den DC-Anschlussklemmen und Sense-Verbindungen als sicher angesehen werden.

Warnung! Wenn die 'plus' DC-Anschlussklemme im Verhältnis zur 'minus' DC-Anschlussklemme 60 VDC überschreiten kann, müssen zusätzliche externe Maßnahmen ergriffen werden, um die Sicherheitsisolation der DC-Anschlussklemmen und Sense-Verbindungen sicherzustellen.

Warnung! Wenn die 'minus' DC-Anschlussklemme im Verhältnis zur Erdung 60 VDC/42,4 Vpk überschreiten kann, müssen zusätzliche externe Maßnahmen ergriffen werden, um die Sicherheitsisolation der DC-Anschlussklemmen und Sense-Verbindungen sicherzustellen.

Die standardmäßigen LAN-, USB- und Interlock-Verbinder sowie optionale Schnittstellen sind auf Erdpotential und können als sicher angesehen werden, wenn die 'minus' DC-Anschlussklemme des Geräts im Verhältnis zur Erdung 1000 VDC/707 Vpk nicht überschreitet für SM70-CP-450, SM210-CP-150 und SM500-CP-90, oder 1500VDC / 1060Vpk im Verhältnis zur PE für SM1500-CP-30.

Vorsicht 1: Falls beide DC-Anschlussklemmen eines Niederspannungsgerätes potentialfrei sind oder falls die DC-Klemmen in Reihe mit einer externen AC- oder DC-Hochspannung geschaltet sind, kann die 'minus' DC- DC-Anschlussklemme den sicheren Wert in Bezug auf die Erdung wie in der Warnung oben spezifiziert überschreiten.

Vorsicht 2: Obwohl ein Hochspannungsgerät mit einer sicheren Spannung unter 60 VDC betrieben wird, muss es zur Sicherheit immer als Hochspannungsgerät angesehen werden! Falsche Bedienung, ein Programmierfehler oder ein externer Fehler können zu einer unsicheren, hohen DC-Ausgangsspannung führen. Für weitere Informationen und Schaltpläne hinsichtlich Erdung und Sicherheit, siehe den online Applikationshinweis *'Safe operation of a power supply'*.

2.5 Gefahr eines elektrischen Schlags

Das Berühren der Kontakte des Netzsteckers oder der Kabel direkt nach der Trennung vom Netz kann zu einem elektrischen Schlag führen. Und aufgrund von geladenen X-Kondensatoren, kann gefährliches Potential zwischen 'plus' oder ‘minus’ DC-Anschlussklemme und PE bestehen oder entstehen. Auch wenn die DC-Anschlussklemmen ausgeschaltet sind, aber das Gerät noch eingeschaltet ist. Daher niemals gleichzeitig PE und einen der DC-Anschlussklemmen berühren mit bloßen Händen.

2.6 Verbindung mit dem Versorgungsnetz

Entweder permanent mit dem Versorgungsnetz verbinden oder via einer Industriesteckverbindung entsprechend IEC 60309. „Permanent verbundene Ausrüstung“ oder „Steckbare Ausrüstung Typ B“.

2.7 Sicherungen

Sicherungen dürfen ausschließlich von autorisiertem Delta Elektronika-Service-Personal ausgetauscht werden, um Brandgefahr dauerhaft auszuschließen.

2.8 AC-Eingangsleistung

Verwenden Sie keine AC-Versorgung, welche die AC-Eingangsspannung und Frequenzleistung dieses Geräts überschreitet. Die AC-Eingangsspannung und Frequenzleistung der Delta Elektronika-Stromversorgungsserie sind im beiliegenden Datenblatt angegeben.

2.9 Spannungsführenden Stromkreise

Bedienungspersonal darf die Geräteabdeckungen nicht entfernen. Interne Einstellungen oder Bauteileaustausche sind ausschließlich qualifiziertem Personal von Delta Elektronika gestattet. Bauteile nie bei eingestecktem Stromkabel austauschen. Um Verletzungen zu vermeiden, vor dem Berühren von Bauteilen immer den Strom trennen, externe Spannungsquellen entfernen und Stromkreise entladen.

2.10 Teileaustausch & Modifikationen

Teileaustausch und Modifikationen sind ausschließlich autorisiertem Delta Elektronika-Service-Personal gestattet. Reparaturen am Gerät dürfen nur durch eine Delta Elektronika-Serviceeinrichtung durchgeführt werden.

2.11 Entfernung von (Sicherheits-) Abdeckungen

Sicherheitsabdeckung(en) werden verwendet, um potenziell gefährliche Spannungen abzudecken. Beachten Sie Folgendes, wenn Sie die Sicherheitsabdeckung(en) entfernen:

- Gerät ausschalten, Gerät von dem AC-Versorgungsnetz und DC-Anwendung trennen.
- Warten Sie 5 Minuten um interne Kondensatoren zu entladen. Abschrauben und entfernen von Abdeckung(en).
- Bevor Sie das Gerät wieder mit dem Versorgungsnetz verbinden, montieren Sie vorher jedes Mal die Abdeckung(en).

2.12 Handhabung und Montage

Warnung! Einheit Gewicht ist 27kg! Beim Auspacken oder Umziehen vorsichtshalber: Heben Sie mit 2 Personen an oder benutzen Sie ein Liftwerkzeug. Gefahr der Zerkleinerung der Gliedmaßen unter Einheit.
Risiko des Schneidens: Einheit hat scharfe Kanten und Ecken!

Warnung! Keine Wandmontage oder Deckenmontage erlaubt! Gefahr der Zerkleinerung unter Einheit. Nur Einheit horizontal montieren, auf eine stabile Oberfläche stellen oder Rack-Montage verwenden.

2.13 Rotierender Lüfter, thermischer Verbrennung

Für die Kühlung des Geräts ist ein richtiger Luftstrom erforderlich. Dies ermöglicht den Betrieb bei voller Leistung und einer längeren Lebensdauer. Wenn das Gerät überhitzt wird, schaltet sich die Stromversorgung herunter, bis das Gerät wieder abgekühlt ist.

Warnung! Top-Abdeckung und Lüfter Auspuffs können heiß werden. Vermeiden Sie diese zu berühren, während Sie das Gerät mit hoher Leistung bedienen!

Warnung! Blockieren Sie keine Lüfter Öffnungen oder Luftabsaugungen. Versuchen Sie nicht, Lüfter Öffnungen durch ein Objekt zu betreten, um Lüfter zu behindern. Lange Haare können in Ventilator stecken bleiben, tragen Sie ein Haarnetz, wenn Sie lange Haare haben.
Warnung! Schließen Sie keine Kabel an die DC-Anschlussklemmen an, während das Gerät eingeschaltet ist. Plötzliches Machen oder Brechen von hohen Gleichstrom kann große Funken verursachen, auch bei niedriger Spannung. Gefahr von thermischen Verbrennung und Feuer!

2.14 Elektromedizinische Geräte

Warnung! Hohe Ströme können durch die DC-Anschlussklemmen laufen. Diese Ströme verursachen starke Magnetfelder. Kommen Sie nicht in die Nähe, wenn Sie ein elektromedizinisches Gerät wie einen Herzschrittmacher haben.

2.15 Umgebungsbedingungen

Die Stromversorgungssicherheitszulassung von Delta Elektronika gilt für die folgenden Betriebsbedingungen:

- Gebrauch : Nur Innengebrauch. **Warnung!** Nicht für die Verwendung in Gegenwart von Kindern oder Tieren vorgesehen!
- Umgebungstemperatur : -20 bis 50 °C.
- Maximale relative Luftfeuchtigkeit : 95%, nicht kondensierend, bis zu 40 °C, 75%, nicht kondensierend, bis zu 50 °C
- Höhe : Nicht über 2000 m Meeresspiegel verwenden.
  Warnung! Elektrische Creepage & Clearance nicht gültig für größere Höhen!
- Verschmutzungsgrad : 2

2.16 Symbole und Markierungen

⚠	*Vorsichtsgefahr bei elektrischen Schlag.*	⏚	*PE-leiterklemme.*
⚠	*Bedienungsanleitung Symbol. Das Gerät wird mit diesem Symbol gekennzeichnet, wenn der Benutzer auf die Bedienungsanleitung verweisen muss.*	o	*Aus (Versorgungsnetz).*
		I	*Ein (Versorgungsnetz).*

WEEE (Waste Electrical & Electronic Equipment)

2.17 Korrekte Entsorgung dieses Produkts

Anwendbar in der Europäischen Union.

Diese Kennzeichnung auf dem Produkt, seiner Verpackung oder seiner Literatur weist darauf hin, dass es am Ende seiner Lebensdauer nicht mit anderen Abfällen entsorgt, sondern separat gesammelt werden sollte, um es verantwortungsvoll zu recyceln, um die nachhaltige Wiederverwendung von Material zu fördern.

3 CONSIGNES DE SÉCURITÉ - Série SM15K

3.1 Mise en garde

Les précautions de sécurité suivantes doivent être suivies dans toutes les phases de fonctionnement, d'entretien et de réparation de cet appareil. Le non-respect des précautions de sécurité ou des avertissements contenus dans le présent document enfreint les normes de sécurité concernant la conception, la production et l'utilisation prévue de cet appareil et peut endommager les dispositifs de protection intégrés. Delta Elektronika n'est pas responsable si l'utilisateur ne se conforme pas à ces exigences.

3.2 Catégorie d'installation

Les alimentations de Delta Elektronika ont été affectées à la catégorie d'installation II (catégorie de surtension II).

3.3 Mise à la terre des bornes de raccordement secteur (bornes d'alimentation CA)

Ce produit est un appareil de classe 1. Pour minimiser le risque de choc électrique, l'appareil doit être connecté au réseau d'alimentation CA à l'aide d'un câble d'alimentation à quatre fils. Dans ce cas, le conducteur de protection doit être fermement connecté à une connexion de mise à la terre électrique (conducteur de protection) à la source d'alimentation. Pour les appareils câblés au réseau d'alimentation, la borne de mise à la terre de protection doit être connectée au connecteur de mise à la terre de sécurité avant d'effectuer une autre connexion. Une interruption du conducteur de protection ou une séparation de la pince de mise à la terre de protection peut entraîner un choc électrique pouvant blesser les personnes.

3.4 Mise à la terre des bornes CC

Si la borne CC d'un appareil est conçue pour recevoir ou obtenir un maximum de 60 VDC et que la borne CC 'moins' ou 'plus' est mise à la terre, la tension sur les bornes CC et les connexions de circuit de lecture (marque 'Sense') peuvent être considérées comme sûres.

Attention! Si le bornier CC 'plus' peut dépasser 60 VDC par rapport au bornier CC 'moins', des mesures externes supplémentaires doivent être prises pour assurer l'isolation de sécurité des bornes CC et des connexions de circuit de lecture (marque 'Sense').

Attention! Si le bornier CC 'moins' peut dépasser 60 VDC/42,4 Vpk par rapport à la mise à la terre, des mesures externes supplémentaires doivent être prises pour assurer l'isolation de sécurité des bornes CC et des connexions de circuit de lecture (marque 'Sense').

Les connecteurs LAN, USB et de verrouillage standard ainsi que les interfaces optionnelles sont à leur potentiel de mise à la terre et peuvent être considérés comme sûrs si le terminal CC 'moins' de l'appareil par rapport à la mise à la terre ne dépasse pas 1000 VDC / 707 Vpk pour SM70-CP-450, SM210-CP-150 et SM500-CP-90, ou 1500VDC / 1060Vpk par rapport à PE pour SM1500-CP-30.

Attention 1 : Si les deux bornes CC d'un dispositif basse tension sont sans potentiel ou si les bornes CC sont connectées en série avec une haute tension EXTERNE CA ou CC, le bornier CC-CC 'moins' peut dépasser la valeur de sécurité en termes de mise à la terre comme spécifié dans l'avertissement ci-dessus.

Attention 2: Bien qu'un appareil haute tension fonctionne à une tension de sécurité inférieure à 60 VDC, il doit toujours être considéré comme un appareil haute tension pour la sécurité! Un fonctionnement incorrect, une erreur de programmation ou une erreur externe peut entraîner une tension de sortie CC incertaine et élevée. Pour plus d'informations et des schémas de circuit concernant la mise à la terre et la sécurité, voir la note d'application en ligne *'Fonctionnement sûr d'une alimentation électrique'*.

3.5 Risque de choc électrique

Toucher les contacts de la fiche d'alimentation ou des câbles immédiatement après la déconnexion du secteur peut entraîner un choc électrique. Et en raison des condensateurs X chargés, un potentiel dangereux entre le terminal CC 'plus' ou 'moins' et le PE peut exister ou survenir. Même si les bornes CC sont éteintes, mais que l'appareil est toujours allumé. Par conséquent, ne touchez jamais PE et l'un des terminaux DC à mains nues en même temps.

3.6 Connexion au réseau d'alimentation

Connectez-vous en permanence au réseau d'alimentation ou via une connexion de prise industrielle conformément à la norme CEI 60309. 'Équipement connecté en permanence' ou 'Équipement enfichable de type B'.

3.7 Fusibles

Les fusibles ne peuvent être remplacés que par le personnel de service autorisé de Delta Elektronika afin d'éliminer définitivement le risque d'incendie.

3.8 Alimentation d'entrée CA

N'utilisez pas une alimentation CA qui dépasse la tension d'entrée CA et la puissance de fréquence de cet appareil. La tension d'entrée CA et la puissance de fréquence de la série d'alimentations Delta Elektronika sont spécifiées dans la fiche technique ci-jointe.

3.9 Circuits en direct

Les opérateurs ne doivent pas retirer les couvercles de l'appareil. Les réglages internes ou les remplacements de composants ne sont autorisés qu'au personnel qualifié de Delta Elektronika. Ne remplacez jamais les composants par le câble d'alimentation branché. Pour éviter les blessures, débranchez toujours le courant avant de toucher les composants, retirez les sources de tension externes et les circuits de décharge.

3.10 Remplacement et modifications des pièces

Le remplacement et les modifications des pièces ne sont autorisés qu'au personnel de service autorisé de Delta Elektronika. Les réparations de l'appareil ne peuvent être effectuées que par un centre de service Delta Elektronika.

3.11 Retrait des couvercles (de sécurité)

Les couvercles de sécurité sont utilisés pour couvrir les tensions potentiellement dangereuses. Gardez les points suivants à l'esprit lorsque vous retirez le(s) couvercle(s) de sécurité :

- Éteignez l'appareil, déconnectez-le du réseau d'alimentation CA et de l'application CC.
- Attendez 5 minutes pour décharger les condensateurs internes. Dévissez et retirez-le(s) couvercle(s).
- Avant de reconnecter l'appareil au réseau d'alimentation, installez-le(s) couvercle(s) à chaque fois.

3.12 Manipulation et assemblage

Attention! Le poids unitaire est de 27 kg! Lors du déballage ou du changement par précaution: Soulevez avec 2 personnes ou utilisez un outil de levage. Danger d'écraser les membres sous l'unité. Risque de coupe: L'unité a des arêtes vives et des coins!

Attention! Aucun montage mural ou au plafond n'est autorisé! Danger d'écrasement sous l'unité. Montez uniquement l'unité horizontalement, placez-la sur une surface stable ou utilisez un support en rack.

3.13 Ventilateur rotatif, combustion thermique

Un flux d'air approprié est nécessaire pour refroidir l'appareil. Cela permet un fonctionnement à pleine puissance et une durée de vie plus longue. Si l'appareil surchauffe, l'alimentation s'éteindra jusqu'à ce que l'appareil ait refroidi à nouveau.

Attention! Le couvercle supérieur et les échappements du ventilateur peuvent devenir chauds. Évitez de les toucher lorsque vous utilisez l'appareil avec une puissance élevée!

Attention! Ne bloquez pas les ouvertures des ventilateurs ou les bouches d'aération. N'essayez pas d'entrer dans les ouvertures des ventilateurs à travers un objet pour obstruer les ventilateurs. Les cheveux longs peuvent rester coincés dans un ventilateur, portez un filet à cheveux si vous avez les cheveux longs.
Attention! Ne connectez pas de câbles aux bornes CC lorsque l'appareil est allumé.
Soudain, faire ou casser un courant continu élevé peut provoquer de grandes étincelles, même à basse tension. Danger de combustion thermique et d'incendie!

3.14 Équipement électromédical

Attention! Des courants élevés peuvent traverser les bornes CC. Ces courants provoquent de forts champs magnétiques. Ne vous approchez pas si vous avez un appareil électromédical comme un stimulateur cardiaque.

3.15 Conditions ambiantes

L'approbation de sécurité de l'alimentation de Delta Elektronika s'applique aux conditions de fonctionnement suivantes :

- Utilisation : Utilisation à l'intérieur seulement. **Attention!** Non destiné à être utilisé en présence d'enfants ou d'animaux!
- Température ambiante : -20 à 50 °C.
- Humidité relative max: 95%, sans condensation, jusqu'à 40 °C, 75 %, sans condensation, jusqu'à 50 °C
- Altitude: Ne pas utiliser au-dessus de 2000 m niveau de la mer.
  Attention! Creepage & Clearance électrique non valable pour les altitudes plus élevées!
- Degré de contamination: 2

3.16 Symboles et marqueurs

⚠	*Risque de prudence en cas de choc électrique.*	⏚	*Terminal conducteur de terre de protection.*
⚠	*Icône du manuel d'instructions. L'appareil est marqué de cette icône lorsque l'utilisateur doit se référer au manuel d'instructions.*	o	*Désactivé (réseau d'approvisionnement).*
		I	*A (réseau d'approvisionnement).*

DEEE (Déchets d'équipements électriques et électroniques)

3.17 Élimination correcte de ce produit

Applicable dans l'Union européenne.

Cet étiquetage sur le produit, son emballage ou sa documentation indique qu'il ne doit pas être éliminé avec d'autres déchets en fin de vie, mais doit être collecté séparément afin de le recycler de manière responsable afin de promouvoir la réutilisation durable des matériaux.

4 MASTER SLAVE INTERFACE

- **Warning!** carefully read the chapter "Safety Instructions" in this manual before connecting or operating the unit!

4.1 CONDENSATION

- During normal operation, humidity will not harm the interfaces, provided the air is not aggressive. The heat normally produced in the power supply will keep it dry.
- Avoid condensation inside the interfaces, break-down could be the result. Condensation can occur during a period the power supply has been switched off (or operating at no load) and the ambient temperature is increasing. Always allow the power supply to dry before switching it on again.

4.2 TEMPERATURE & COOLING

- The storage temperature range is –40 to +85 °C.
- The operating temperature range is –20 to +50 °C. But this temperature range only holds when the air-intake and air-outlet of the power supply are unobstructed and the temperature of the air-intake is not higher than +50°C.
- When the power supply is mounted in a cabinet, please note that the temperature of the air-intake should be kept low and avoid a short circuit in the airflow i.e., the hot air leaving the air-outlet entering the air-intake again.
- Please note: a lower temperature extends the life of the interface.

4.3 FIRMWARE

- First install the interface inside the unit, then check the firmware package is P0151 or higher. In the front menu, go to: SYSTEM INFO -> UNIT-> VERSION.
- If an update is required, refer to the SM15K unit manual how to do this.

4.4 HARDWARE INSTALLATION

- **Warning!** Never make connections to the Power Inputs and Outputs or the Sense Connector when the SM15K unit is connected to the mains supply or power outlet!
- Safety covers are used to cover these in- and outputs.

4.4.1 INSERT INTERFACES

- Note: the M/S-**2** interfaces can be used in SM15K only.
- In SM3300 use the M/S interfaces.
- Switch off the units.
- Disconnect the units from the mains supply.
  - Remove the cable from mains supply.
  - Wait for 5 minutes to allow internal capacitors to discharge.

- The Interface can be inserted in slot 3 or slot 4.
  - See figure 4 - 1 for location of the slots.
  - Unscrew the 2pcs. torx T10 screws and remove the slot cover.
  - Insert the interface.
  - Place the 2 screws back to secure the interface.

4.4.2 DC POWER CONNECTIONS FOR **M/S-PARALLEL**

- It is strongly advised to use one of the M/S PAR kits from Delta Elektronika for best and safest results!
  - These kits include special copper bars, bolts, nuts, specific washers, patch cables, earth cable and extra safety covers.
  - Each kit is designed for a specific number of units.
  - Download the **M/S application note** or contact factory for more information.

- Place all the units in a 19-inch rack.
  - Remove the input covers from the units.
  - Remove the mains supply cables.
  - Insert the units in the rack.
  - Stack the units with minimum spacing in between them. Distance between sets of output terminals is 3U = 133.35mm.

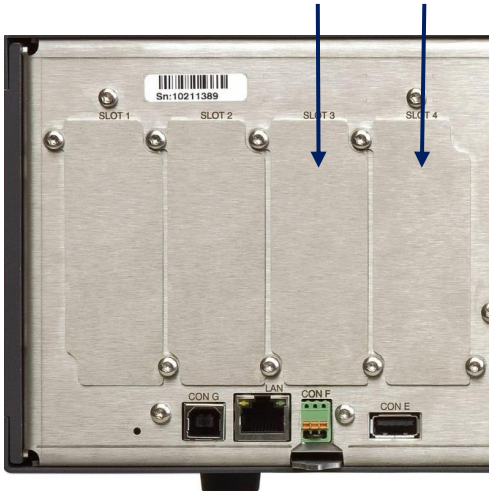

fig 4 - 1
Slot 3 and 4 are valid for INT MOD M/S-2.

- Assign a unit as Master.
  - The Master has a specific location in the system, depending on the number of Slaves. Although in a later stage the functional assigned is done via the unit's menu, it is required to do the physical assignment first; at which location will the Master be and at which the Slave(s).
  - For an uneven number of units, position the Master in between an equal number of slaves.
  - For example, in a set of 7 units, the upper 3 units must be slaves, the master in position 4, and below it another 3 slaves.
  - For an even number of units, position the master in such a way that under it there's 1 slave more than above it.
  - For example, in a set of 8 units, the upper 3 units must be slaves, then the master, and below it another 4 slaves.
  - See the **M/S application note** for more details.

- Connect the copper strips.
  - See example drawings for different number of units in the **M/S application note**. See fig 4 - 2.
  - Remove safety covers from the DC power terminals.
  - Remove the M8 bolts from the DC power terminals.
  - Important: follow the exact order of washers, lock washers, etc. to ensure correct and safe operation.
  - Use the thin crinkle washer "M8 SZ DIN137B" between the bolt head and the terminals for maximum isolation distance between + and -. This replaces one of the standard flat washers.
  - Use one of the standard flat washers "M8 A2 DIN125A" + lock washer "M8 A2 DIN127B" between the strips and the "M8 A2 DIN934" nuts.
  - Note: for easy assembly, first insert the bolts with crinkle washers in all –DC power terminals. Then assemble the entire + strip to the +DC power terminals. This because bolts cannot be inserted in the –DC power terminals once the + strip is in place.

- Connect the load cables.
  - The load cables must be connected as close as possible to the master at the position indicated on the drawings in the application note.
  - When a second set of load cables is required, connect them to the Slave below the Master.
  - Place the lugs directly on the strips - never place a washer between a cable lug and a copper strip because it will burn out.
  - After doing the above steps, for safety always add the special **M/S-safety covers** over the output terminals:
    - Cover DWG2532 is for the outputs of the upper and lower units.
    - Cover DWG2533 is for units in between them.
    - Cover DWG2560 to cover the strips in between the units.
  - Create openings for the load cables where necessary.

4.4.3 DC POWER CONNECTIONS FOR **M/S-SERIES**

- It is strongly advised to use one of the M/S SER kits from Delta Elektronika for best and safest results!
  - These kits include special copper bars, bolts, nuts, specific washers, patch cables and extra safety covers.
  - The basic kit M/S SER SET BA is for 2 units.
  - For each extra unit, an extra kit M/S SER SET BB is required.
  - Download the **M/S application note** or contact factory for more information.

- Place all the units in a 19-inch rack.
  - Remove the input covers from the units.
  - Remove the mains supply cables.
  - Insert the units in the rack.
  - Stack the units with minimum spacing in between them.
  - Distance between sets of output terminals is 3U = 133.35mm.

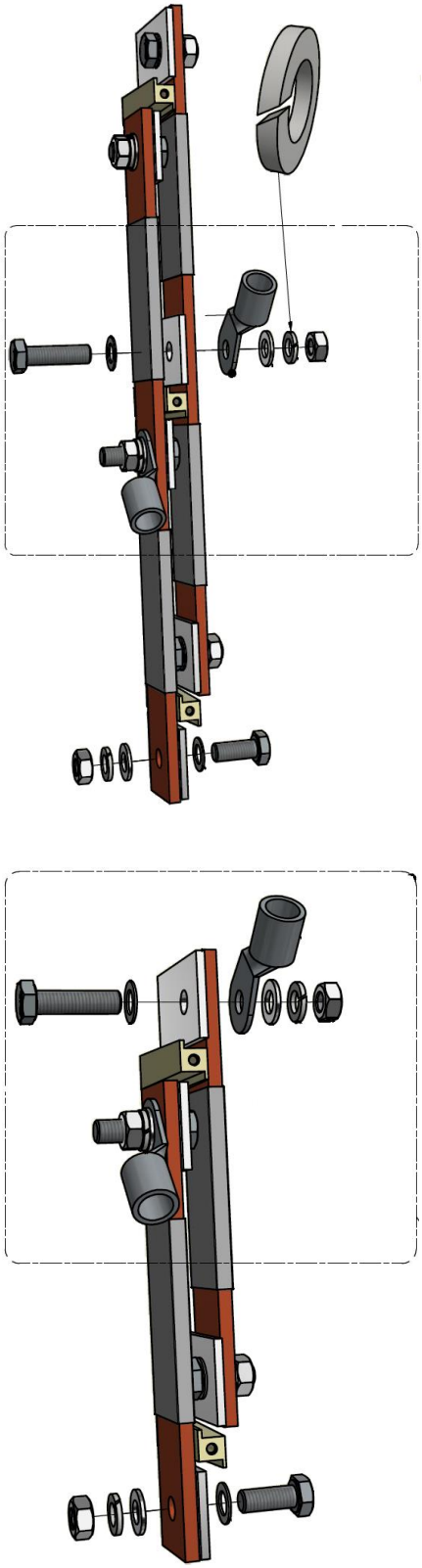

fig 4 - 2
Examples of DC-connections for Parallel and Series operation are available in the M/S application notes.

- Assign a unit as Master.
  - The Master has a specific location in the system, depending on the number of Slaves.
  - Although in a later stage the functional assigned is done via the unit's menu, it is required to do the physical assignment first; at which location will the Master be and at which the Slave(s).
  - For an uneven number of units, position the Master in between an equal number of slaves.
  - For example, in a set of 5 units, the upper 2 units must be slaves, the master in position 3, and below it another 2 slaves.
  - For an even number of units, position the master in such a way that under it there's 1 slave more than above it.
  - For example, in a set of 6 units, the upper 2 units must be slaves, then the master, and below it another 3 slaves.
  - See the **M/S application note** for more details.
  - For set-ups with more than 1 rack, position the master as described in the above, and fill the other racks with slaves only.

- Connect the copper strips.
  - See example drawings for different number of units in the **M/S application note**. See fig 4 - 2.
  - Remove safety covers from the DC power terminals.
  - Remove the M8 bolts from the DC power terminals.
  - Important: follow the exact order of washers, lock washers, etc to ensure correct and safe operation.

- Connect the load cables.
  - Connect the cable lugs at the position indicated on the drawings in the application note.
  - Place the lugs directly on the strips - never place a washer between a cable lug and a copper strip because it will burn out.
  - After doing the above steps, for safety always add the special **M/S-safety covers** over the output terminals:
    - Cover DWG2532 is for the outputs of the upper and lower units.
    - Cover DWG2533 is for units in between them.
    - Cover DWG2560 to cover the strips in between the units.
  - Create openings for the load cables where necessary.

- Contact factory for systems with more than one rack of units

4.4.4 CONNECT EARTH CABLES

- Connect the earth cables for better hf-immunity of the M/S-system.
  - Use the CBL2603 - supplied in the Delta M/S-kits.
  - See figure 4 – 3: connect all units together using multiple cables CBL2603. All units in the M/S-configuration must be connected together.
  - Warning: do NOT connect this point to an external Earth point! This is already taken care of via the line socket.
  - See figure 4 – 4: use this M4 bold for connecting the lug of cable CBL2603.
  - Use the supplied cable only, this guarantees a short, low impedance connection.

4.4.5 CONNECT INTERFACES

- The available connectors on this interface are two 8 pole modular jack connectors, see fig. 4 - 5.
- Use the cables supplied with the M/S kit (Cat6, FTP or S/FTP).
- Start with the master and connect the cable from the "OUT"
- connector to the "IN" connector of the first slave above.
- Then connect another cable from the "OUT" connector of the first slave to the "IN" connector of the next slave. Repeat this until all devices are connected (see fig 4 - 2).

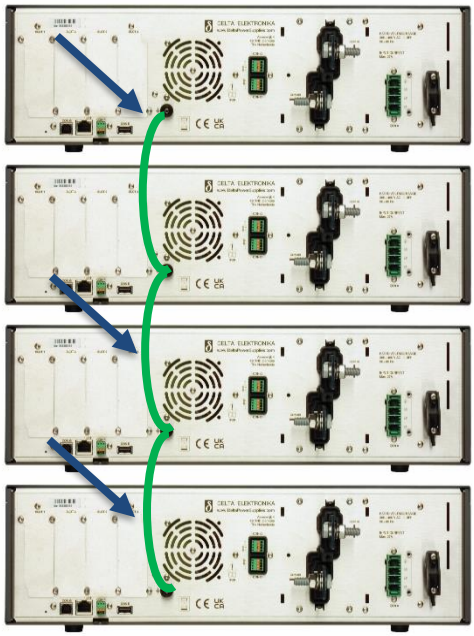

fig 4 - 3
Connect all units together via cable CBL2603. CBL2603 is supplied with the M/S-kits.
***Warning:** only connect units together, but do NOT connect these cables to an external Earth-terminal!*

fig 4 - 4
Use this M4-size bold for connecting al CBL2603.

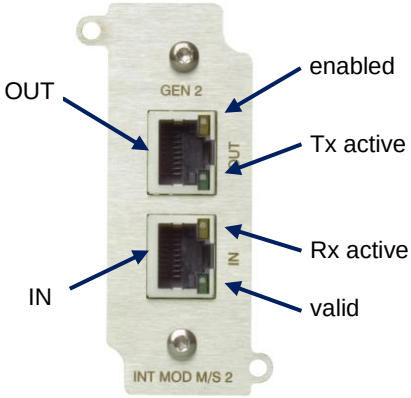

fig 4 - 5
There are two 8-pole modular jack connectors available on the INT MOD M/S-2.

- For systems with 3 or more slaves, use the longer cable (1m or 2m depending on amount of slaves) to connect the upper unit to the most lower unit.
- From the lower unit, again connect to "IN" of the unit above
- Finally close the loop at the Master unit "IN" connector.
- For more than one rack of units, connect the "OUT" of the upper unit to the "IN" of the lower unit in the next rack. In that rack connect up until the highest unit is reached. From that unit, connect to the "IN" of the lowest unit of the first rack again and there connect up to the master unit to close the loop.

4.4.6 CONNECT AC MAINS

- Connect the mains supply cables to the units.
  - Make sure the cable is not yet connected to the mains supply!
  - Place the input safety covers.

- Connect the mains supply cables to the mains supply.
- Switch on the units.

4.5 UNIT CONFIGURATION

- The unit will automatically detect the new inserted interface.
- The interface icon will be shown in the display, see fig 4 - 6.
- Configuring of slaves:
  - To configure a power supply as a slave, via the front menu go to CONFIGURATION -> MASTER SLAVE -> SETTINGS and set the state as slave. Press "OK" to confirm.
  - The slave icon will be shown in the display, see fig 4 - 7.
  - The icon will blink as long as the system is in configuration mode.
  - Once the master is configured, the icon will stop blinking.

- Configuring of the master:
  - To configure a power supply as the master, via the front menu go to CONFIGURATION -> MASTER SLAVE -> SETTINGS and set the state as master.
  - In the same menu, enter the number of devices that are connected in series or parallel.
  - Press "OK" to confirm.
  - The master icon will be shown in the display, see fig 4 - 8.

- The master or slave can also be configured via the web interface or using Ethernet commands.
- After changing master or slave settings, stored sequences need to be rebuilt due to system scaling. See the "Building a Sequence" paragraph in chapter 7 of the **Ethernet & Sequencer Programming Manual for the SM15K**.

4.6 TROUBLE SHOOTING

- Check there is only one M/S-2 interface installed per unit.
- Check that all interfaces are type INT MOD M/S-2, and there is no INT MOD M/S, see fig 4 - 9.
- Check the firmware version as specified in paragraph 3 of this chapter.
- Check the source of the power supply.
- Check the web interface for errors in one of the devices.
- Use Ethernet or web commands to check for errors in the master slave system.

4.7 CALIBRATION

- Calibration of the interface is not applicable.

fig 4 - 6
Position of the standard interface icon in the unit display.

fig 4 - 7
Position of the interface Slave icon in the unit display.

fig 4 - 8
Position of the interface Master icon in the unit display.

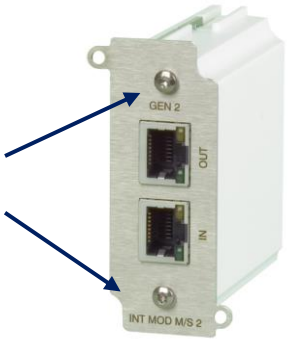

fig 4 - 9
Check for the marking "GEN 2" and " M/S-2" for the correct interface for SM15K units.

5 ISOLATED CONTACTS

- **Warning!** carefully read the chapter "Safety Instructions" in this manual before connecting or operating the unit!

5.1 CONDENSATION

- During normal operation, humidity will not harm the interfaces, provided the air is not aggressive. The heat normally produced in the power supply will keep it dry.
- Avoid condensation inside the interfaces, to prevent break-down. Condensation can occur during a period the power supply has been switched off (or operating at no load) and the ambient temperature is increasing. Always allow the power supply to dry before switching it on again.

5.2 TEMPERATURE & COOLING

- The storage temperature range is –40 to +85 °C.
- The operating temperature range is –20 to +50 °C. But this temperature range only holds when the air-intake and air-outlet of the power supply are unobstructed, and the temperature of the air-intake is not higher than +50°C.
- When the power supply is mounted in a cabinet, please note that the temperature of the air-intake should be kept low and avoid a short circuit in the airflow i.e. the hot air leaving the air-outlet entering the air-intake again.
- Please note: a lower temperature extends the lifetime of the interface.

5.3 FIRMWARE

- First install the interface inside the unit, then check the firmware package is P0151 or higher. In the front menu, go to: SYSTEM INFO -> UNIT-> VERSION.
- If an update is required, refer to the SM15K unit manual how to do this.

5.4 HARDWARE INSTALLATION

- **Warning!** Never make connections to the Power Inputs and Outputs or the Sense Connector when the SM15K unit is connected to the mains supply or power outlet!
- Safety covers are used to cover these in- and outputs.

5.4.1 INSERT INTERFACE IN THE UNIT

- Switch off the unit.
- Disconnect the unit from the mains supply.
- Wait for 5 minutes to allow internal capacitors to discharge.
- Select a none used slot at the rear side.
- The Interface can be inserted in any free slot 1...4.
- See figure 5 - 1.
- Unscrew the 2 torx T10 screws and remove the slot cover.
- Insert the interface and place the 2 screws back to secure the interface.

5.4.2 CONNECT INTERFACE

- The available connectors on this interface are push wire or so-called push in connectors.
- Relay 1 & 2 and relay 3 & 4 via a 6 pole connector.
- Interlock & Enable via a 3-pole connector, see fig. 5 - 2.
- Use cables with an internal wiring with a diameter of
- 0.3 ... 0.5mm^2 and with a sufficient voltage rating for the voltage of the circuit.
- With regards to safety, the connectors are at the level of Protective Earth.
- Connect the mains supply again and check all the safety covers are installed.
- Switch on the unit.
- The LED indicated in fig. 5 - 2 will light up.

5.5 UNIT CONFIGURATION

- The unit will automatically detect the new inserted interface.
- The interface icon will be shown in the display, see fig 5 - 3.

fig 5 - 1
All positions are valid for INT MOD CON.

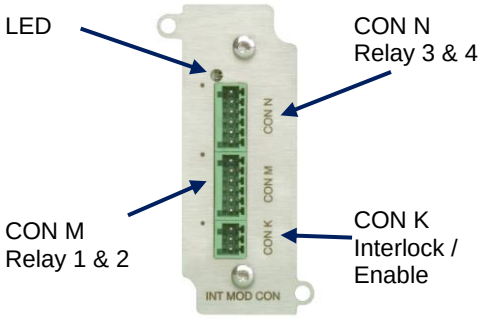

fig 5 - 2
All four relay and Interlock/Enable connections are made via push wire or so-called push-in connectors.

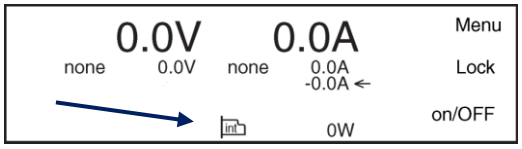

fig 5 - 3
Position of the interface icon in the unit display.

5.6 RELAY CONTACTS & INTERLOCK

- This interface provides 4 changeover relay contacts, an Enable input and an Interlock (additional to the standard SM15K Interlock).
- The Relay contacts can be controlled & monitored by Ethernet commands and the web interface. They can also be linked to several system statuses, like ACF, DCF, etc.
- The Interlock and Enable input can be monitored by Ethernet commands.
- Refer to the Ethernet programming manual for commands, chapter "Command Description", paragraph "Interfaces".
- The manual is stored inside every SM15K unit and can be downloaded via the web interface or from **www.DeltaPowerSupplies.com**.

5.6.1 RELAY CONTACTS (CON M & CON N)

- Relay contacts (see fig. 5 - 4 & fig. 5 - 6) are as described below, during power off and when not set. The relay contacts can handle a maximum contact voltage of 60VDC. The maximum continuous current is 2A.

- Pinning CON M :
  - 6 = Relay 1 NC
  - 5 = Relay 1 NO
  - 4 = Relay 1 Common
  - 3 = Relay 2 NC
  - 2 = Relay 2 NO
  - 1 = Relay 2 Common

- Pinning CON N :
  - 6 = Relay 3 NC
  - 5 = Relay 3 NO
  - 4 = Relay 3 Common
  - 3 = Relay 4 NC
  - 2 = Relay 4 NO
  - 1 = Relay 4 Common

5.6.2 INTERLOCK & ENABLE (CON K)

- The Interlock input (pin 1) is initially connected to pin 3 (common) (see fig. 5 - 5). Replace the link by two wires and a switch (for example a cabinet door switch) when its function is required.
- The Enable input (24V, pin 2) impedance is approximately 12kOhm and has a working range of 15V - 30V (see fig. 5 -7).
- Connect the common of the external voltage to pin 3.
- The Interlock and the Enable can not be used simultaneously (see fig. 5 - 8).
- All interlocks should be valid.

- Pinning CON K:
  - 3 = Common
  - 2 = Enable
  - 1 = Interlock

5.7 TROUBLE SHOOTING

5.7.1 INTERLOCK SYMBOL DISPLAYED

- Check the unit's standard interlock connection
- Check Interlock / enable connection on CON K.

5.8 CALIBRATION

- Calibration of the interface is not applicable.

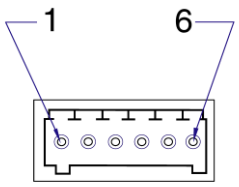

fig 5 - 4
Pinning of CON M and N.

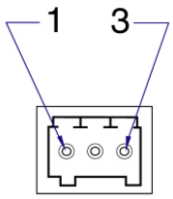

fig 5 - 5
Pinning of CON K.

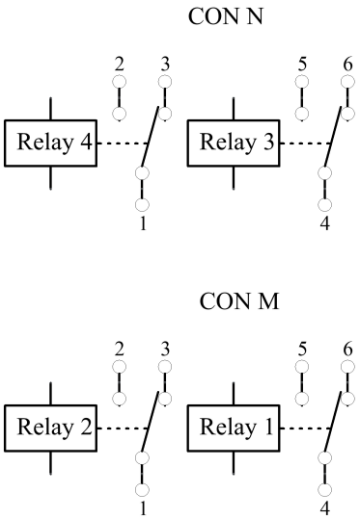

fig 5 - 6
Pinning of CON M and N.

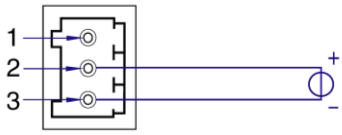

fig 5 - 7
15 - 30 V Enable.

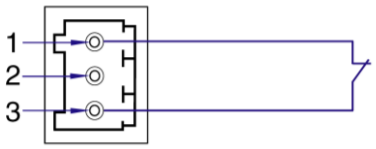

fig 5 - 8
Interlock contact (door switch).

6 SERIAL INTERFACE

- **Warning!** carefully read the chapter "Safety Instructions" in this manual before connecting or operating the unit!

6.1 CONDENSATION

- During normal operation, humidity will not harm the interfaces, provided the air is not aggressive. The heat normally produced in the power supply will keep it dry.
- Avoid condensation inside the interfaces, to prevent break-down. Condensation can occur during a period the power supply has been switched off (or operating at no load) and the ambient temperature is increasing. Always allow the power supply to dry before switching it on again.

6.2 TEMPERATURE & COOLING

- The storage temperature range is –40 to +85 °C.
- The operating temperature range is –20 to +50 °C. But this temperature range only holds when the air-intake and air-outlet of the power supply are unobstructed and the temperature of the air-intake is not higher than +50°C.
- When the power supply is mounted in a cabinet, please note that the temperature of the air-intake should be kept low and avoid a short circuit in the airflow i.e. the hot air leaving the air-outlet entering the air-intake again.
- Please note: a lower temperature extends the lifetime of the interface.

6.3 FIRMWARE

- First install the interface inside the unit, then check the firmware package is P0151 or higher. In the front menu, go to: SYSTEM INFO -> UNIT-> VERSION.
- If an update is required, refer to the SM15K unit manual how to do this.

6.4 HARDWARE INSTALLATION

- **Warning!** Never make connections to the Power Inputs and Outputs or the Sense Connector when the SM15K unit is connected to the mains supply or power outlet!
- Safety covers are used to cover these in- and outputs.

6.4.1 INSERT INTERFACE IN THE UNIT

- Switch off the unit.
- Disconnect the unit from the mains supply.
- Wait for 5 minutes to allow internal capacitors to discharge.
- Select a none used slot at the rear side.
  The Interface can be inserted in any free slot 1...4.
  See figure 6 - 1.
- Unscrew the 2 torx T10 screws and remove the slot cover.
- Insert the interface and place the 2 screws back to secure the interface.

6.4.2 CONNECT INTERFACE

- The available connectors on the serial interface are (see fig. 6 - 2 & fig. 6 - 3):
  - female 9 pole D-connector for RS232n (For connection with a PC use a 1:1 cable (supplied with interface)
  - B-type socket for USB (cable for connection with PC supplied with interface)
  - push wire or so-called push in connector for RS485 or RS422
- Use cables with an internal wiring with a diameter of 0.3 ... 0.5mm^2 and with a sufficient voltage rating for the voltage of the circuit.
- With regards to safety, the serial programming connectors are at the level of Protective Earth.
- Connect the cable to the programming source.
- Connect the mains supply again and check all the safety covers are installed.
- Switch on the unit.
- The LED should light up.

fig 6 - 1
All positions are valid for INT MOD SER.

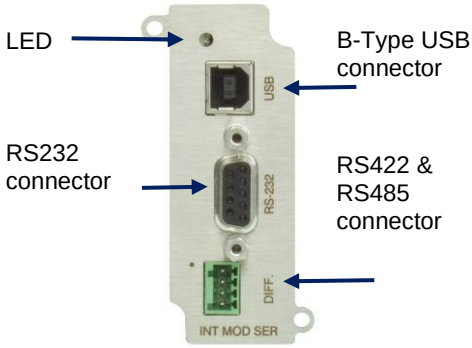

fig 6 - 2
The available connectors on the INT MOD SER.

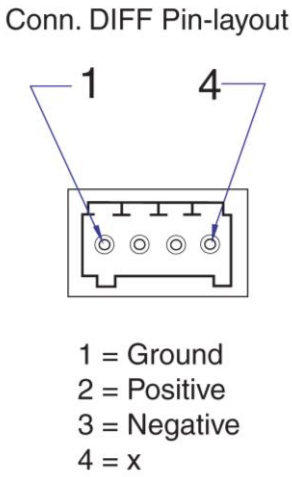

fig 6 - 3
Pin connections of the RS422 / RS485 connector.

6.5 UNIT CONFIGURATION

- The unit will automatically detect the new inserted interface.
- The interface icon will be shown in the display, see fig 6 - 4.
- For programming the voltage, current and/or power via the interface, set the correct source for CV, CC and CP respectively, see below example:

  - For example the interface is mounted in slot2.
    To program the CV-settings via this interface, via the front menu go to CONFIGURATION -> PRG SOURCE -> Vsettings and set it to Slot2.

    To program the CC-settings via this interface, go to CONFIGURATION -> PRG SOURCE -> Isettings and also set it to Slot2.

    To program the CP-settings via this interface, go to CONFIGURATION -> PRG SOURCE -> Psettings and also set it to Slot2.

    Instead of doing this via the Front Menu, the source can also be set via the web interface or via Ethernet commands if the unit is connected to the network via LAN.

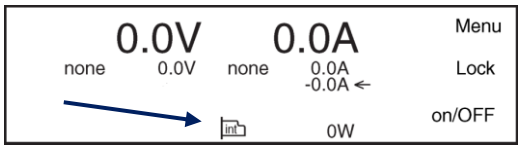

fig 6 - 4
Position of the interface icon in the unit display.

6.6 SERIAL PROGRAMMING

- The unit can be programmed by using the serial programming commands. See table 6.1 for an overview of the available commands.
- To start, first the command "CH n" must be executed to activate the interface by setting its channel number (address).
- The variable n is a number between 1...32.
  For example "CH 1".
- The command "CH?" queries the channel of the active serial interface.
- For more details about the commands in table 6.1, refer to chapter 5 of the **Programming manual for Ethernet & Sequencer**.
- The manual is stored inside every SM15K unit and can be downloaded via the web interface. It can also be downloaded from **www.DeltaPowerSupplies.com**.

6.7 PROGRAMMING SPEED

- Programming from a low to a high output voltage is nearly load independent.

6.8 MONITORING VIA SERIAL INTERFACE

- Via the programming command "MEASURE:" the voltage, current or power can be monitored.
- Download the manual **Ethernet & Sequencer Programming SM15K** for details.

6.9 TROUBLE SHOOTING

- Check the programming source is set to the correct slot.
- Check the output is switched ON, the Interlock is connected and Remote ShutDown is low.
- The first programming command must be "CH n" otherwise the
- interface will not be activated.
- Check that the communication is working; "*IDN?" must return a value. Ensure to end the query with the termination character LF.
- (LF = 0x0Ah in ASCII)
- Note: the serial interface uses the '.' (dot) as the decimal symbol and not the ',' (comma). Check if your program is using the settings in Microsoft Windows© regional settings.
- Either change your program to specifically use the '.' or else change the decimal symbol to '.' in your regional settings (from the control panel).
- Check that the power supply's output is not limited.
- Consult the SM15K manual about adjusting the limit settings.
- Check that ALL values for CV, CC and CP are not zero.

CH
CH?
*CLS
*IDN?
*RST
*SAV
CALI:VOLT:MEAS:OFFSET
CALI:VOLT:MEAS:OFFSET?
CALI:VOLT:MEAS:GAIN
CALI:VOLT:MEAS:GAIN?
CALI:CURR:MEAS:OFFSET
CALI:CURR:MEAS:OFFSET?
CALI:CURR:MEAS:GAIN
CALI:CURR:MEAS:GAIN?
MEASURE:VOLTAGE?
MEASURE:CURRENT?
MEASURE:POWER?
OUTPUT?
OUTPUT
SOURCE:VOLTAGE
SOURCE:VOLTAGE?
SOURCE:VOLTAGE:MAX?
SOURCE:CURRENT
SOURCE:CURRENT?
SOURCE:CURRENT:MAX?
SOURCE:CURRENT:NEGATIVE
SOURCE:CURRENT:NEGATIVE?
SOURCE:CURRENT:NEGATIVE:MAX?
SOURCE:POWER
SOURCE:POWER?
SOURCE:POWER:MAX?
SOURCE:POWER:NEGATIVE
SOURCE:POWER:NEGATIVE?
SOURCE:POWER:NEGATIVE:MAX?
SYSTEM:ERROR?
SYSTEM:FRONTPANEL:STATUS
SYSTEM:FRONTPANEL:STATUS?
SYSTEM:FRONTPANEL:CONTROL
SYSTEM:FRONTPANEL:CONTROL?
SYSTEM:PASSWORD:STATUS?
SYSTEM:REMOTE:CV:STATUS
SYSTEM:REMOTE:CV:STATUS?
SYSTEM:REMOTE:CC:STATUS
SYSTEM:REMOTE:CC:STATUS?
SYSTEM:REMOTE:CP:STATUS
SYSTEM:REMOTE:CP:STATUS?
SYSTEM:RSD
SYSTEM:RSD:STATUS?
SYSTEM:PASSWORD
STATUS:REGISTER:A?
STATUS:REGISTER:B?

** = Clear Error Cue*

table 6 - 1
Available serial programming commands.

- For example it is not possible to program a voltage when the current and power control is set to zero.
- Check that the power supply is in the required mode (CV or CC or CP). When programming a voltage, the unit must be in CV-mode, when programming a current, the unit must be in CC-mode and when programming a power, the unit must be in CP-mode.

6.10 CALIBRATION

- Calibration of the interface is not applicable.

6.11 Settings

- Settings via the web page.

  - Bus type : USBcom
  - Device channel nr : ch 1
  - Baudrate : bps 9600
  - Data bits : 8
  - Stop bits : 1
  - Flow control : None
  - Parity bits : None
  - Slewrate : Disabled
  - Termination : Disabled
  - Differential communication : Half-duplex

- Port settings on the PC.

  - Baudrate : bps 9600
  - Data bits : 8
  - Parity bits : None
  - Stop bits : 1
  - Flow control : None

7 DIGITAL (USER) I/O INTERFACE

- **Warning!** carefully read the chapter "Safety Instructions" in this manual before connecting or operating the unit!

7.1 CONDENSATION

- During normal operation, humidity will not harm the interfaces, provided the air is not aggressive. The heat normally produced in the power supply will keep it dry.
- Avoid condensation inside the interfaces, to prevent break-down. Condensation can occur during a period the power supply has been switched off (or operating at no load) and the ambient temperature is increasing. Always allow the power supply to dry before switching it on again.

7.2 TEMPERATURE & COOLING

- The storage temperature range is –40 to +85 °C.
- The operating temperature range is –20 to +50 °C. But this temperature range only holds when the air-intake and air-outlet of the power supply are unobstructed and the temperature of the air-intake is not higher than +50°C.
- When the power supply is mounted in a cabinet, please note that the temperature of the air-intake should be kept low and avoid a short circuit in the airflow i.e. the hot air leaving the air-outlet entering the air-intake again.
- Please note: a lower temperature extends the lifetime of the interface.

7.3 FIRMWARE

- First install the interface inside the unit, then check the firmware package is P0151 or higher. In the front menu, go to: SYSTEM INFO -> UNIT-> VERSION.
- If an update is required, refer to the SM15K unit manual how to do this.

7.4 HARDWARE INSTALLATION

- **Warning!** Never make connections to the Power Inputs and Outputs or the Sense Connector when the SM15K unit is connected to the mains supply or power outlet!
- Safety covers are used to cover these in- and outputs.

7.4.1 INSERT INTERFACE IN THE UNIT

- Switch off the unit.
- Disconnect the unit from the mains supply.
- Wait for 5 minutes to allow internal capacitors to discharge.
- Select a none used slot at the rear side.
- The Interface can be inserted in any free slot 1...4.
- See figure 7 - 1.
- Unscrew the 2 torx T10 screws and remove the slot cover.
- Insert the interface and place the 2 screws back to secure the interface.

7.4.2 CONNECT INTERFACE

- The available connectors on the digital user I/O interface are high density 15pole D-connectors, female, see fig. 7 - 2.
- Use cables with an internal wiring with a diameter of 0.3 ... 0.5mm^2 and with a sufficient voltage rating for the voltage of the circuit.
- With regards to safety, the user I/O connectors are at the level of Protective Earth.
- Connect the cable to the programming source.
- Connect the mains supply again and check all the safety covers are installed.
- Switch on the unit.
- The LED indicated in fig. 7 - 2 will light up.

7.5 UNIT CONFIGURATION

- The unit will automatically detect the new inserted interface.
- The interface icon will be shown in the display, see fig 7 - 3.

fig 7 - 1
All positions are valid for INT MOD DIG.

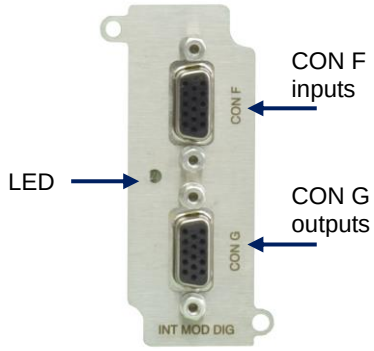

fig 7 - 2
User Outputs via a 15 pole D-connector.
User Inputs via a 15 pole D-connector.
Both connectors are High Density female.

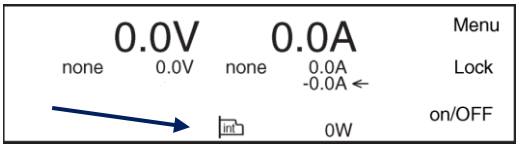

fig 7 - 3
Position of the interface icon in the unit display.

7.6 INPUTS AND OUTPUTS

- This interface provides 8 user inputs and 8 user outputs.
- These can be controlled / monitored by Ethernet commands or can be used to interact with the Sequencer to make the power supply act like a Power PLC.
- Refer to the Delta Elektronika programming manual for Ethernet & Sequencer for commands.
- The manual is stored inside every SM15K unit and can be downloaded via the web interface. It can also be downloaded from **www.DeltaPowerSupplies.com**.

7.6.1 USER INPUTS (CONNECTOR CON F):

- Unconnected inputs are LOW. To make an input HIGH, apply the +5V of pin 9 or pin 14. Also an external voltage can be used to control the inputs. Make sure the common of the external source is connected to pin 10 or pin 15. The user inputs have a working range of 2V - 30V, use a common zero and have an impedance of approximately 22kOhms. The maximum load of the +5V is 100mA.
- See figure 7 - 4 and table 7 - 1 for the pinning of CON F.

7.6.2 USER OUTPUTS (CONNECTOR CON G):

- The 8 user outputs are Open Drain with common zero.
- When an output is TRUE, it is pulled down to 0V. Otherwise the output is open. The output impedance is 7 Ohm, maximum rating is 30V / 200mA.
- See figure 7 - 4 and table 7 - 2 for the pinning of CON G.

7.7 CALIBRATION

- Calibration of the interface is not applicable.

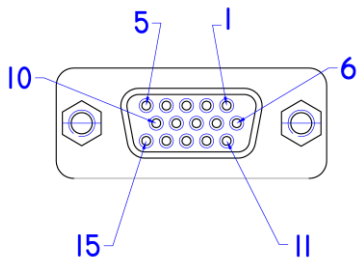

fig 7 - 4
Pinning of connector CON F and G.

1 = user input A
2 = user input B
3 = user input C
4 = user input D
5 = user input E
6 = user input F
7 = user input G
8 = user input H
9 = +5V
10 = 0V
11 = n.c.
12 = n.c.
13 = n.c.
14 = +5V
15 = 0V

1 = user output A
2 = user output B
3 = user output C
4 = user output D
5 = user output E
6 = user output F
7 = user output G
8 = user output H
9 = +5V
10 = 0V
11 = n.c.
12 = n.c.
13 = n.c.
14 = +5V
15 = 0V

8 ISOLATED ANALOG INTERFACE

- **Warning!** carefully read the chapter "Safety Instructions" in this manual before connecting or operating the unit!

8.1 CONDENSATION

- During normal operation, humidity will not harm the interfaces, provided the air is not aggressive. The heat normally produced in the power supply will keep it dry.
- Avoid condensation inside the interfaces, to prevent break-down. Condensation can occur during a period the power supply has been switched off (or operating at no load) and the ambient temperature is increasing. Always allow the power supply to dry before switching it on again.

8.2 TEMPERATURE & COOLING

- The storage temperature range is –40 to +85 °C.
- The operating temperature range is –20 to +50 °C. But this temperature range only holds when the air-intake and air-outlet of the power supply are unobstructed and the temperature of the air-intake is not higher than +50°C.
- When the power supply is mounted in a cabinet, please note that the temperature of the air-intake should be kept low and avoid a short circuit in the airflow i.e. the hot air leaving the air-outlet entering the air-intake again.
- Please note: a lower temperature extends the lifetime of the interface.

8.3 FIRMWARE

- First install the interface inside the unit, then check the firmware package is P0151 or higher. In the front menu, go to: SYSTEM INFO -> UNIT-> VERSION.
- If an update is required, refer to the SM15K unit manual how to do this.

8.4 HARDWARE INSTALLATION

- **Warning!** Never make connections to the Power Inputs and Outputs or the Sense Connector when the SM15K unit is connected to the mains supply or power outlet!
- Safety covers are used to cover these in- and outputs.

8.4.1 INSERT INTERFACE IN THE UNIT

- Switch off the unit.
- Disconnect the unit from the mains supply.
- Wait for 3 minutes to allow internal circuits to discharge.
- Select a none used slot at the rear side.
  See figure 8 - 1.
- Unscrew the 2 torx T10 screws and remove the slot cover.
- Insert the interface and place the 2 screws back to secure the interface.

8.4.2 CONNECT INTERFACE

- The connector on the analog interface is a female 15pole D-connector.
- Use cables with an internal wiring with a diameter of 0.3 ... 0.5mm^2 and with a sufficient voltage rating for the voltage of the circuit.
- To avoid hum or noise, the programming cable may have to be twisted in some cases.
- With regards Safety, the analog programming connector is at the level of Protective Earth.
- Connect the cable to the programming source.
- The pinning of the INT MOD ANA is similar to other Delta Elektronika power supplies, see fig 8 - 2.
- Connect the mains supply again and check all the safety covers are installed.
- Switch on the unit.

fig 8 - 1
All positions are valid for INT MOD ANA.

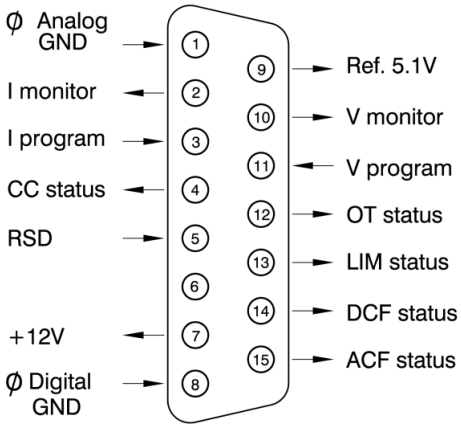

fig 8 - 2
Pinning of the 15-pole programming connector.

fig 8 - 3
Position of the interface icon in the unit display.

8.5 UNIT CONFIGURATION

- The unit will automatically detect the new inserted interface.
- The interface icon will be shown in the display, see fig 8 - 3.
- For programming the voltage and/or current via the interface, set the correct source for CV and CC respectively, see below example.

  - For example the interface is mounted in slot2.
    To program the CV-settings via this interface, via the front menu go to CONFIGURATION -> SOURCE -> Vsettings and set it to Slot2.

    To program also the CC-settings via this interface, go to CONFIGURATION -> SOURCE -> Isettings and also set it to Slot2.

    Instead of doing this via the Front Menu, the source can also be set via the web interface or via Ethernet commands if the unit is connected to the network via LAN.

8.6 ANALOG PROGRAMMING

- The output voltage and current can be programmed by a voltage in the range of 0 - 5V (default setting) or 0 - 10V, proportionally to the full output voltage and current, (see fig. 8 - 4).
  - Note that a voltage at the I-prog input (pin3), sets both the value for CC+ and CC-. Thus applying +5V on pin3 on an SM500-CP-90, sets CC+ to +90A, and CC- to –90A.
  - CC+ and CC- cannot be programmed to a different value via the analog input.
  - A negative input voltage is ignored and sets CC+ and CC- to 0A.
- The range 0 - 5V or 0 - 10V can be selected by ethernet command only. See **ethernet programming manual** for further details.
- Both have a protection circuit formed by a series resistor and a parallel zener diode. The capacitor limits the speed to a safe value. Note that the programming inputs are floating with regards the power output.
- Turn the output on again with the OUTPUT ON/OFF button.
- To program the unit by current instead of voltage, simply use a parallel resistor as a current to voltage converter (see fig. 8 - 5).
- The front display will show the programmed values for CV and CC.

8.7 ANALOG MONITORING

- The monitor outputs give a voltage in the range of 0 - 5V or 0 - 10V, proportional to the output current or voltage. The output current can easily be measured using the I-monitor (see fig. 8 - 6).
- The range 0 - 5V or 0 - 10V can be selected by ethernet command only. See ethernet programming manual for further details.
- Note that the monitor outputs are floating with regards the power output (similar to signals from the ISO AMP).
- The monitor outputs are buffered with op-amps and protected with series resistors and parallel zener diodes.
- The table in the interface datasheet shows the impedance levels of the monitoring outputs.
- The monitoring outputs can drive a meter directly (fig. 8 - 6).
- **Note:** on a pulsating load, the current monitor will not exactly match the output current. This is mainly caused by the current through the output capacitors.

8.8 STATUS SIGNALS

- The status outputs have a separate Ø-connection (pin 8) to avoid unwanted offsets in the programming.
- All the status outputs are logic outputs. Logic "0" means the output is 0 V, logic "1" means the output is 5 V. This makes it possible to drive directly: an opto-coupler, a TTL gate or a CMOS gate.

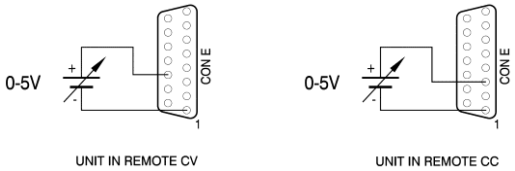

fig 8 - 4
Programming by voltage:
left voltage -, right current by programming.

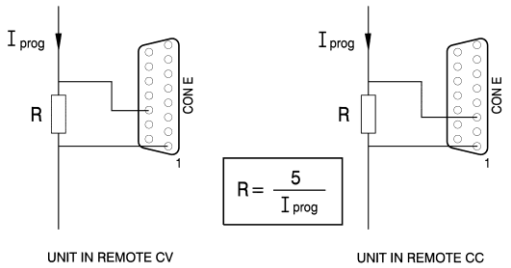

fig 8 - 5
Programming by current
left voltage-, right current programming.

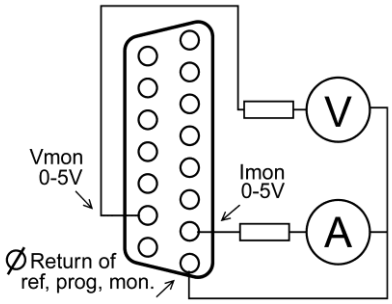

fig 8 - 6
Measuring the output voltage and current using the monitoring signals.

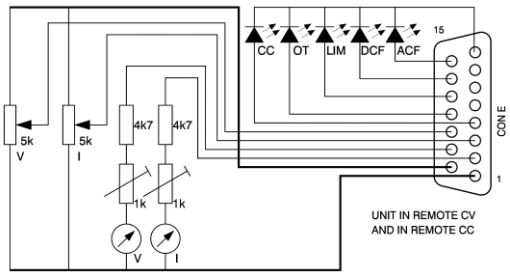

fig 8 - 7
Remote control.

- The Limit Status or LIM-status is "1" in case the output voltage or current reaches the limit setting. Which limit circuit is active can be seen on the front panel indicators.
- The Over Temperature Status or OT status is "1" in case of an over temperature, the display will show the OT symbol and the output shuts down.
- The Current Control Status or CC-status output is "1" when the unit is in CC-mode.
- The Power Sink OverLoad Status or PSOL-status is not used on the SM15K - it is only for SM3300.
- The AC-Fail Status or ACF-status output is "1" in case the input voltage is too low or too high.
- The DC-Fail Status or DCF-status output is "1" when the output voltage is either 5% below or above the set point.
- The table in the interface datasheet shows the impedance levels of the status outputs.
- See figure 8 - 7 for a connection diagram.

8.9 REMOTE SHUTDOWN

- A voltage of +4 V...+12 V on the Remote ShutDown input on the programming connector will switch off the output of the unit.
- If the input is high, the RSD icon is shown in the display, see fig 8 - 8.
- It is also possible to use a relay contact or a switch to shut the unit down (see fig. 8 - 9).
- In standby mode the power supply consumes very little power.
- Note: also via Eth or other interfaces RSD can be activated.

8.10 REFERENCE VOLTAGE

- A 5.114V reference voltage is available on the connector. This reference can be used to control the unit with external potentiometers.

8.11 AUXILIARY +12V

- The 12V on the programming connector can be used to supply external circuits. The output current is fuse protected at 0.2A and should not be overloaded.
- Output impedance is 5 Ohms.

8.12 TROUBLE SHOOTING

8.12.1 PROGRAMMING DOES NOT WORK OK

- Check the programming source is the correct slot.
- Check that there is only 1 analog interface installed.
- Check the output is switched ON, the Interlock is connected and Remote ShutDown is low.

8.12.2 STATUS OUTPUT FAIL

- Check the wiring of the analog programming connector for short circuit or loose contacts.
- If the front display shows a status icon, but the logic output on the interface remains low, send the unit back for repair.

8.13 CALIBRATION

- The isolated analog interface is factory calibrated.
- If desired, both the 5 V and 10 V range can be custom calibrated. See the ethernet programming manual for more details.

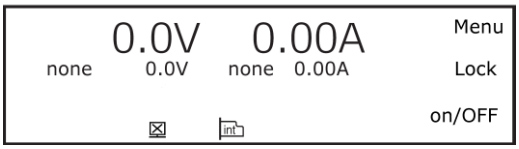

fig 8 - 8
Position of the RSD icon in the unit display.

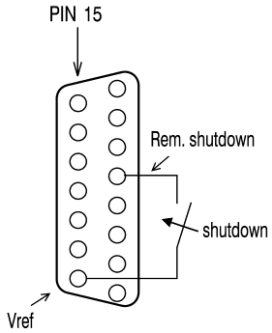

fig 8 - 9
Remote ShutDown using a relay contact.