DELTA ELEKTRONIKA B.V.
DC POWER SUPPLIES

Vissersdijk 4, 4301 ND
Zierikzee, the Netherlands

www.DeltaPowerSupplies.com
Tel. +31 111 413656

SM15K – Master/Slave Assembly Kits

- **M/S SER SET BA**
- **M/S SER SET BB**

M/S SER Kits SM500-CP-90

This document is an addition to the SM15K interface manual.
It contains instructions for the connection for Master/Slave set-ups using the M/S SER assembly kits.

APPLICATION NOTE

Revision 2022/03

Contents:

1 – M/S SER SET BA
2 – M/S SER SET BB

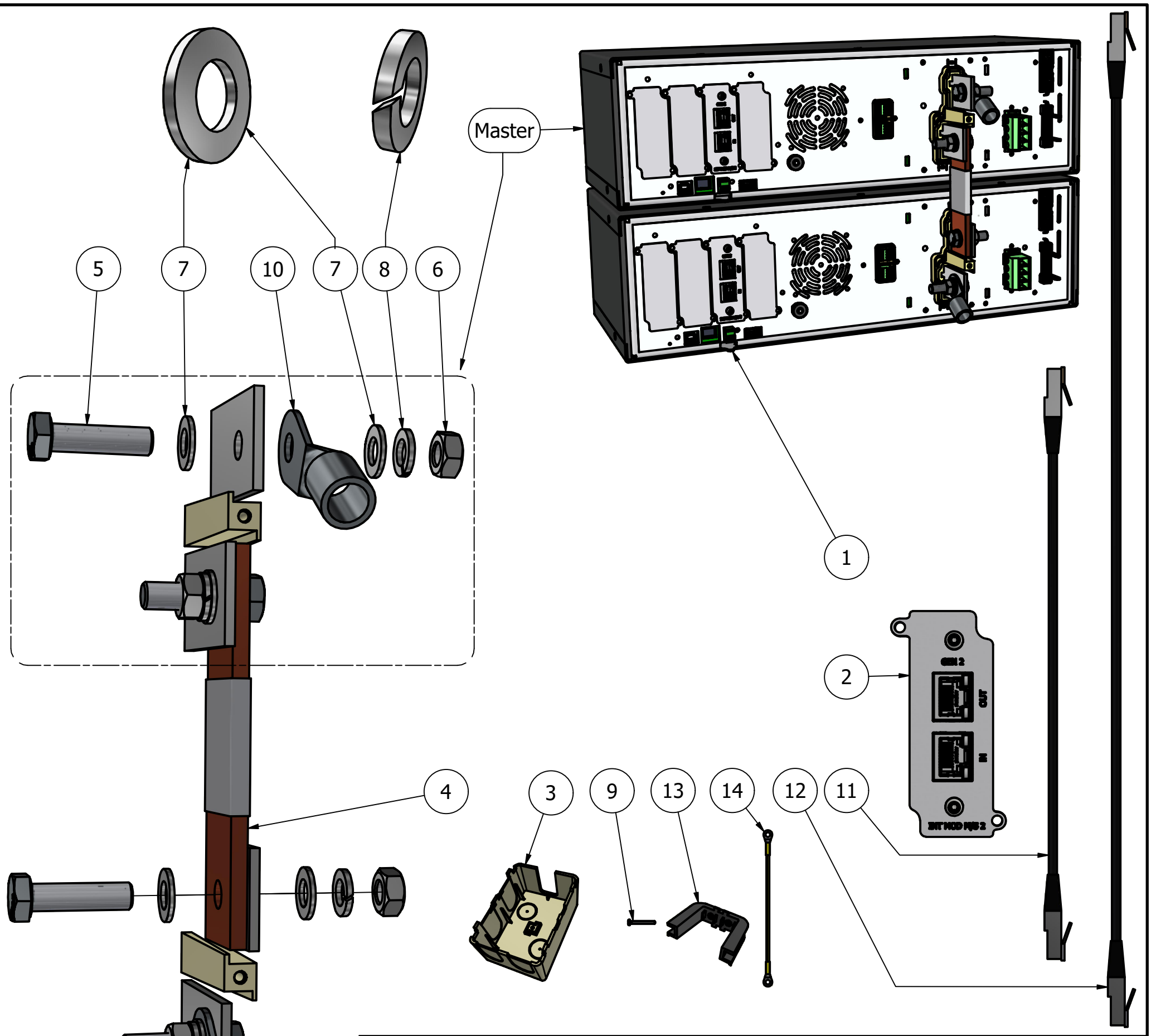

PARTS LIST				
M/S SER SET BA	ITEM	QTY	STOCK NUMBER	DESCRIPTION
*	1	2	SM500-CP-90	power unit
*	2	2	int mod ms 2	interface m/s gen 2
v	3	2	dwg2532	cover output parallel 1
v	4	1	dwg2537	m/s strip series hv
	5	4	M8x30SG DIN933	screw M8X30 SG DIN933 10.9/Geomet-500
	6	4	M8 A2 DIN934	nut M8 A2
	7	8	M8 A2 DIN125A	washer M8 A2
	8	4	M8 A2 DIN127B	lock washer A2
	9	2	PT3.5x30 A2 T10	D-PT 3.5x30 ro he A2 T10 selftap
	10	2	Not supplied	Load cable cable lug M8
v	11	1	CBL P SFTP 0.5 BK	patchcable BK 0.5m RJ45
v	12	1	CBL P SFTP 1 BK	patchcable BK 1 m RJ45
v	13	1	DWG2560	cover output strips m/s
v	14	1	DWG2603	earth cable m/s

* ORDER SEPARATELY

			SURFACE TREATMENT:	MAT:
				DIM: mm Tol.: ± 0.2
			NAME DESIGNER	Delta Elektronika B.V.
			S.Janse	VISSERSDIJK 4
			DATE	4301 ND ZIERIKZEE
REVISIONS	DATE	NAME	04-02-2022	NETHERLANDS
REMARK:	TITLE: MASTER SLAVE assembly series 2U		DWG	A3
				SHEET 1-2

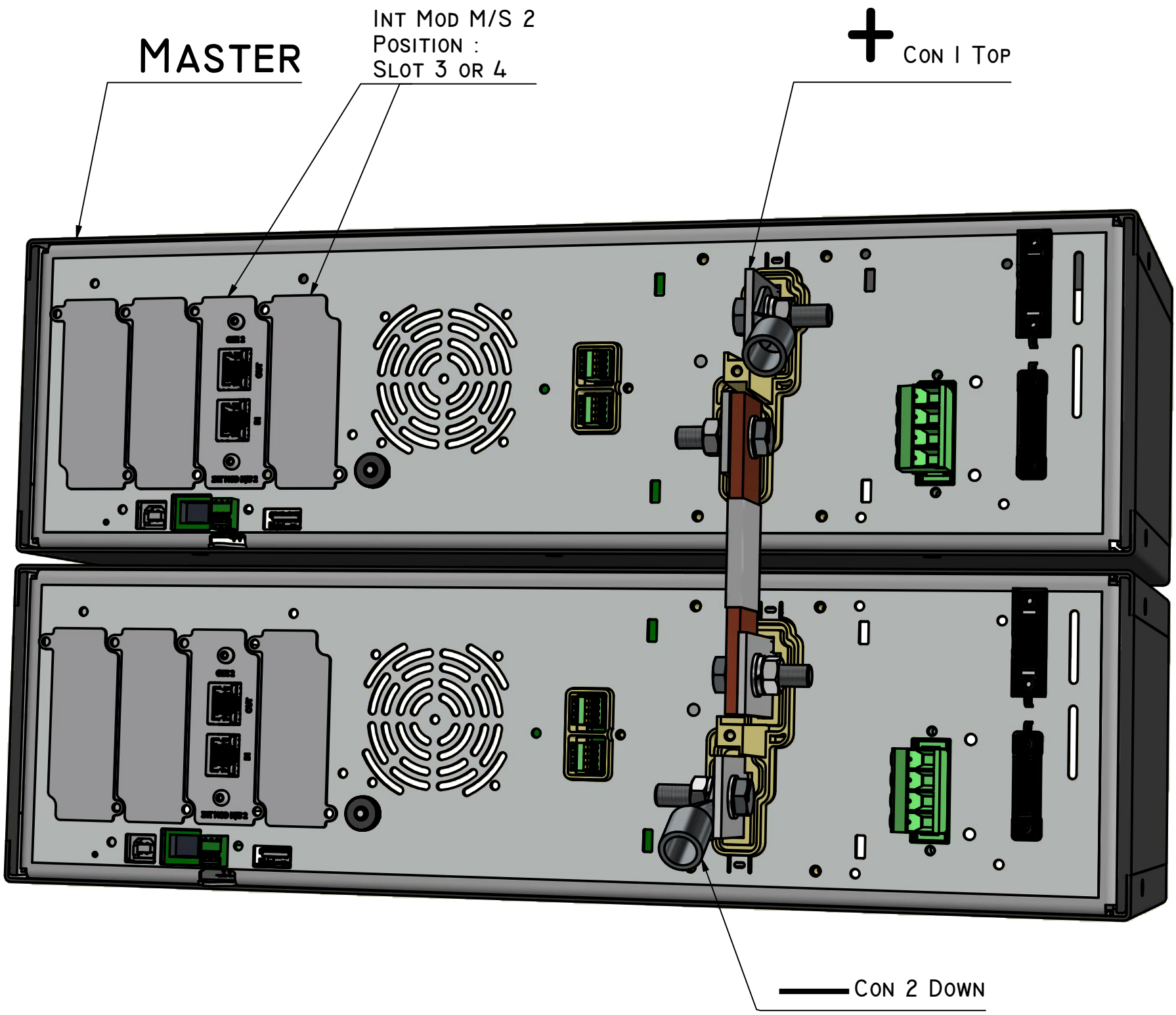

SM500-CP-90 (2x)

			Surface treatment:	Mat:
				Dim: mm Tol.: ± 0.2
			Name designer	Delta Elektronika B.V.
			S.Janse	Vissersdijk 4
			Date	4301 ND Zierikzee
Revisions	Date	Name	25-06-2020	Netherlands
Remark:	Title: MASTER SLAVE assembly series 2U			DWG A3
				Sheet 2-2

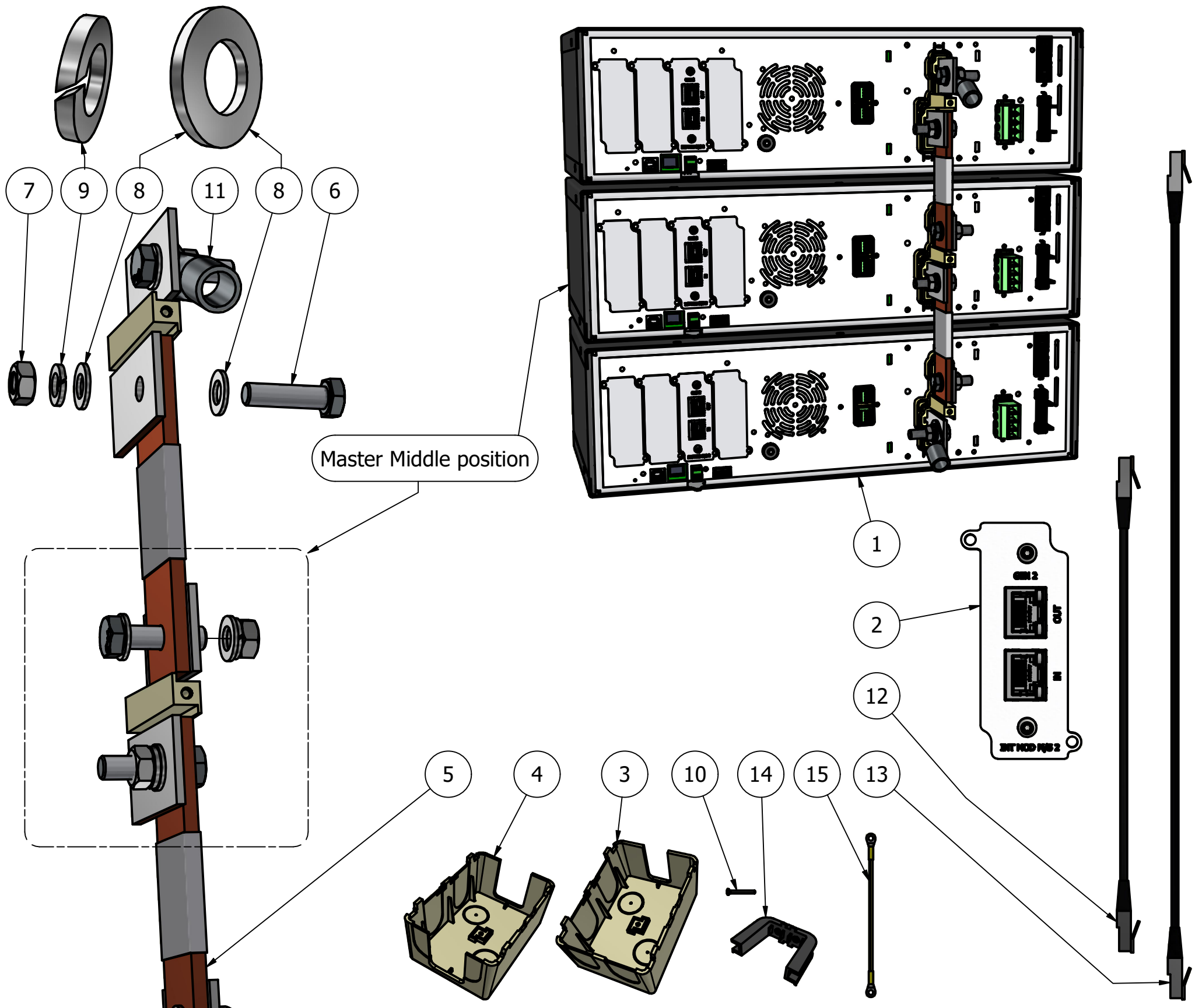

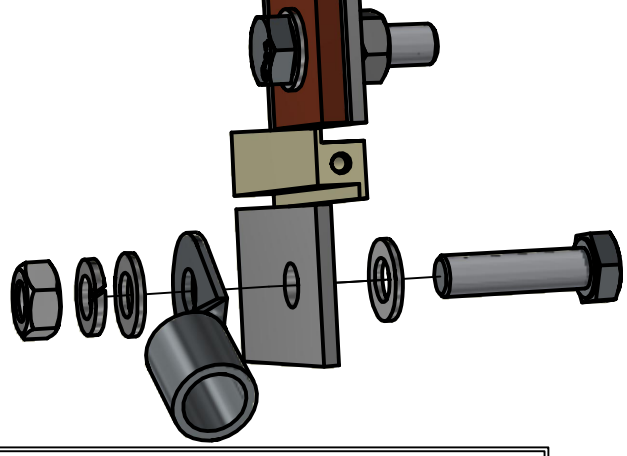

*				
CONNECTION SETUP 3/4/5/6 UNITS M/S SER SET BA INCLUDED				
UNITS	3	4	5	6
ITEM 2	3x	4x	5x	6x
3	2x	2x	2x	2x
4	1x	2x	3x	4x
5	2x	3x	4x	5x
12	2x	3x	4x	5x
14	2x	3x	4x	5x
15	2x	3x	4x	5x

** ORDER SEPARATELY

PARTS LIST

M/S SER SET BB	ITEM	QTY	STOCK NUMBER	DESCRIPTION
**	1	*	SM500-CP-90	power unit
**	2	*	int mod ms 2	interface m/s gen 2
Set BA	3	2	dwg2532	cover output parallel 1
v*	4	*	dwg2533	cover output parallel 2
v*	5	*	dwg2537	m/s strip series hv
	6	unit	M8x30SG DIN933	screw M8X30 SG DIN933 10.9/Geomet-500
	7	unit	M8 A2 DIN934	nut M8 A2
	8	unit	M8 A2 DIN125A	washer M8 A2
	9	unit	M8 A2 DIN127B	lock washer A2
	10	unit	PT3.5x30 A2 T10	D-PT 3.5x30 ro he A2 T10 selftap
	11	2	Not supplied	Load cable cable lug M8
v*+Set BA	12	*	CBL SETP 0.5 BK	patchcable 0.5m R45J
Set BA	13	1	CBL SETP 1 BK	patchcable 1 m R45J
v*	14	*	DWG2560	cover output strips m/s
v*	15	*	DWG2603	earth cable m/s

			SURFACE TREATMENT:	MAT:
				DIM: mm Tol.: ± 0.2
			NAME DESIGNER	Delta Elektronika B.V.
			S.Janse	VISSERSDIJK 4
			DATE	4301 ND ZIERIKZEE
REVISIONS	DATE	NAME	04-02-2022	NETHERLANDS
REMARK:	TITLE: MASTER SLAVE assembly series 3-6U			DWG
				A3
				SHEET 1-2

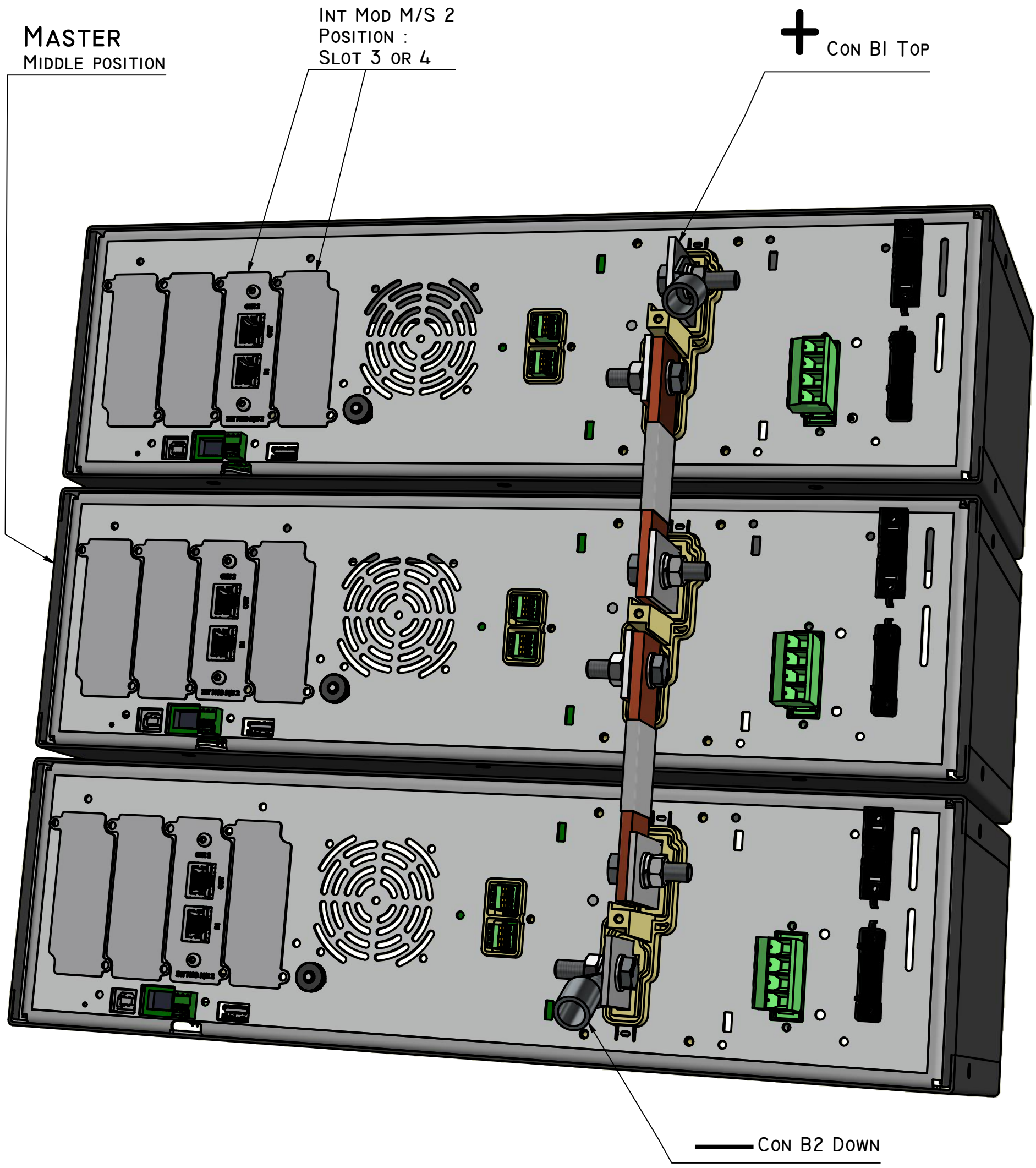

SM500-CP-90 (3-6x)

Connection setup 3/4/5/6 units
Always combined with M/S SER SET BA

			Surface treatment:	Mat:
				Dim: mm Tol.: ± 0.2
			Name designer	Delta Elektronika B.V.
			S.Janse	Vissersdijk 4
			Date	4301 ND Zierikzee
Revisions	Date	Name	25-06-2020	Netherlands
Remark:	Title: MASTER SLAVE assembly series 3-6 U			DWG A3
				Sheet 2-2